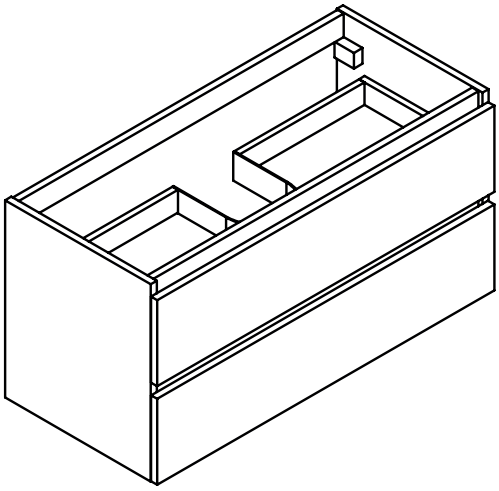

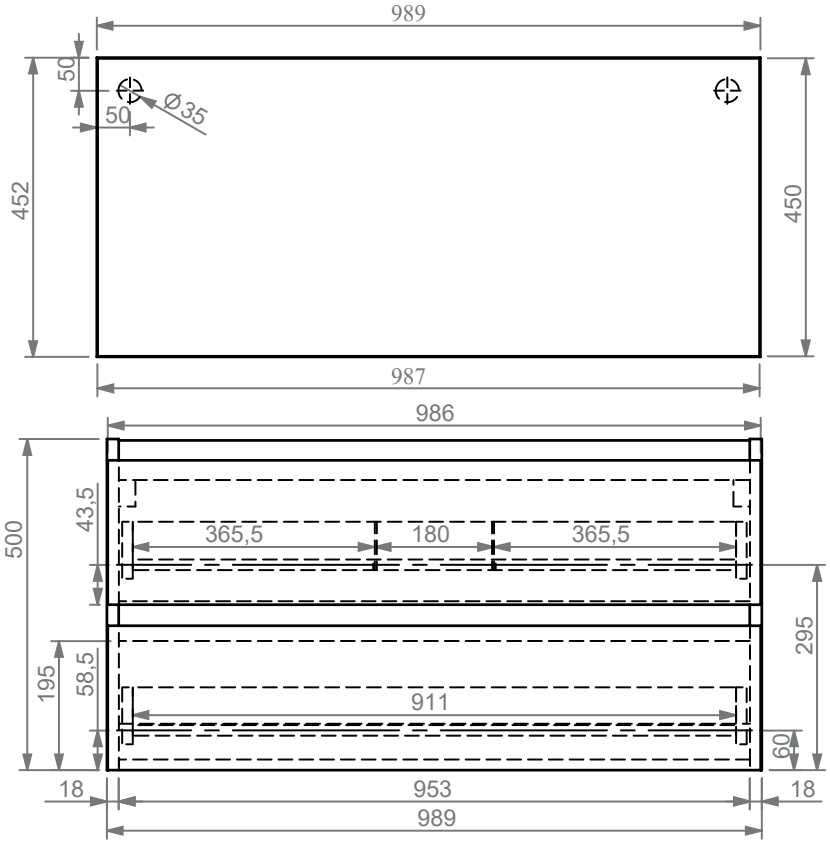

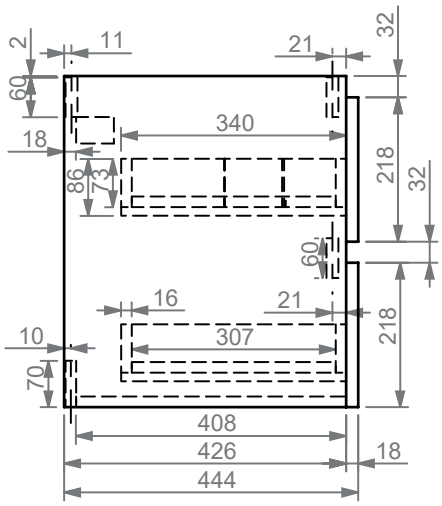

WAVEDESIGN
BY WISA

Milano 100